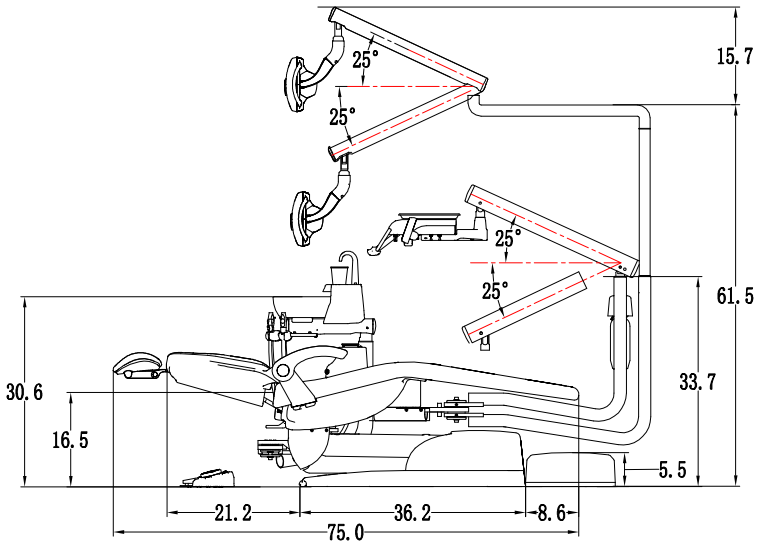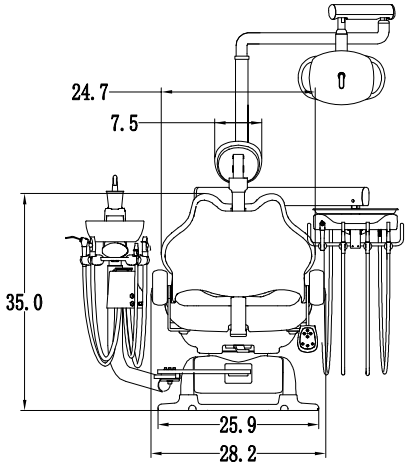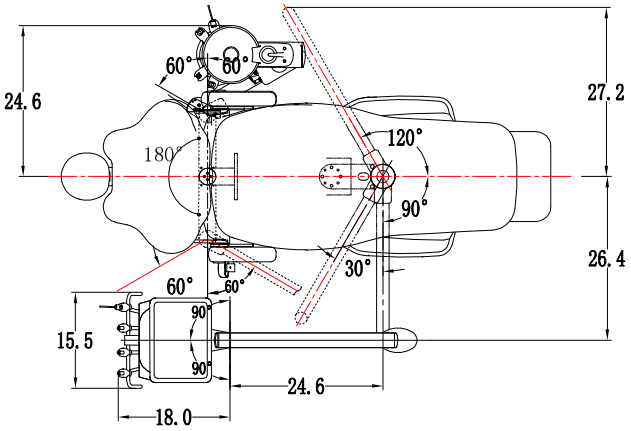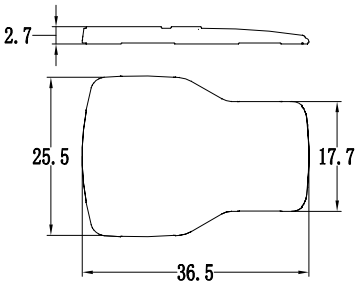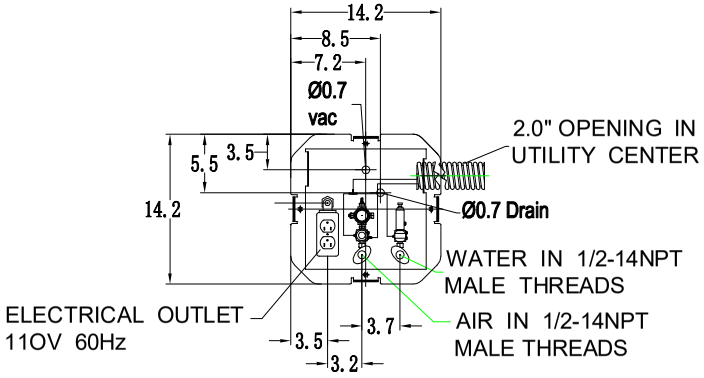AJ16 Classic 201